TM - DRAIN PLASTIC PLUG WITH MAGNET



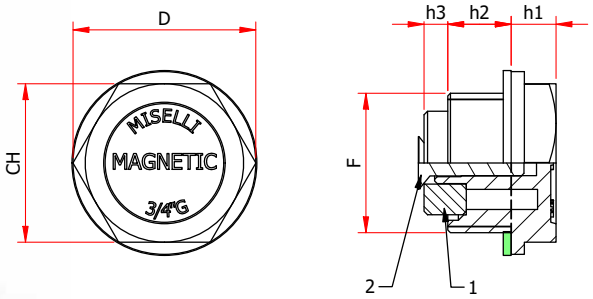

1 = Magnet
2 = Fixing rivet

Threaded hex head oil plug that can be fitted on the bottom of the transmission or tank, to be used as drain plug; the magnet attract ferrous metal parts, preventing damage to gears and others moving components.

Material: Polyamide PA66.

Sealing: flat fiber gasket.

Maximum working temperature: 100°C/212°F.

Cod.	F	CH	D	h3	h2	h1
TM/14	G 1/4"	17	20	5	9	7
TM/38	G 3/8"	18	22	10	10	7,5
TM/12	G 1/2"	24	27	9	11	8
TM/34	G 3/4"	30	34	6,5	11	9
TM/1	G 1"	36	42	8	12	10,5

TF/C - BLANKING CAP WITH INTERNAL THREAD



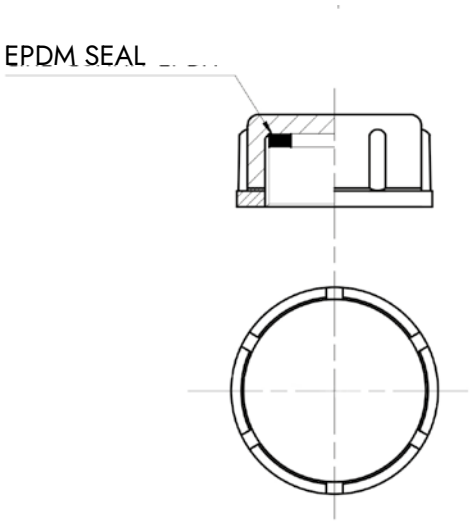

Blanking cap with internal thread designed for plastic tanks.

Material: Nylon.

Sealing: internal flat gasket in EPDM, on enquiry.

Maximum working temperature: 90°C/ 194°F.

Thread sizes: G.1/4", 3/8", 1/2", 3/4" 1", 1 1/4", 1 1/2, 2", 2 1/2, 3".